COPYRIGHT IN THIS DRAWING BELONGS TO VERO TECHNOLOGIES Ltd. IT MUST NOT BE COPIED OR DISCLOSED TO THIRD PARTIES WITHOUT WRITTEN PERMISSION FROM VERO TECHNOLOGIES Ltd.

WARNING: THIS DRAWING HAS BEEN CREATED AND STORED ELECTRONICALLY – DO NOT SCALE. THIS COPY MAY NOT BE UP-TO-DATE. IF IN DOUBT – ASK.

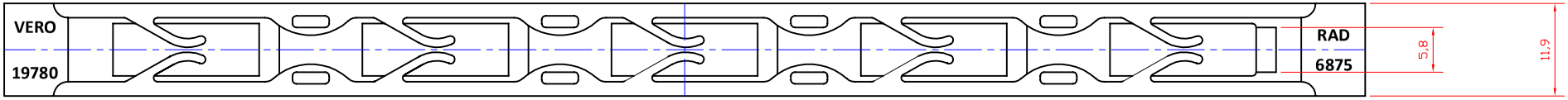

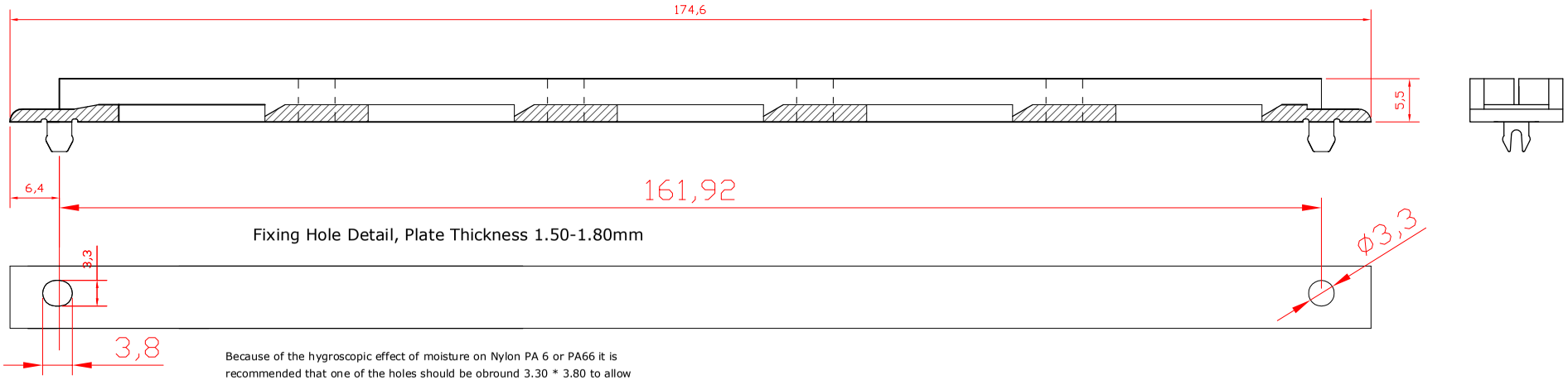

Because of the hygroscopic effect of moisture on Nylon PA 6 or PA66 it is recommended that one of the holes should be obround 3.30 * 3.80 to allow for variation in length if used to potentially humid atmosphere.

Material: Nylon PA6 or PA66 or equivalent
Colour: Black
Flammability: UL94V-2

E.C.N.	DRG ISSUE	DESCRIPTION	DATE
	1		

VERO TECHNOLOGIES Ltd
Unit 25, Solent Ind. Est.,
Hedge End, Southampton,
Hants, SO30 2FY, UK.
Tel +44 (0) 1489 776 930

TOLERANCES EXCEPT WHERE OTHERWISE STATED
OVER 1 METRE ± 1mm
0. ± 0.5
0.0 ± 0.3
0.00 ± 0.1
ANGLE ± 1.0

ALL DIMENSIONS IN MILLIMETRES

B/A

PROJECTION

TITLE: ANTI-VIBRATION GUIDE 174.6 mm LONG

MATERIAL

FINISH

FIRST USED ON.

CHECKED

DRAWN

DRG No: 29-1251 Customer

29-1251